INTERQUIP ELECTRONICS CO., LIMITED

Flat A, 9th Floor, On Shing Industrial Building, 2-16 Wo Liu Hang Road,

Fotan, New Territories, Hong Kong

Tel: (852) 2413 5515 Fax: (852) 2413 7053

Web site: http://www.interquip.com Email: iql@interquip.com

Crystal Oscillator Specification and Approval Sheet

Customer: Genie Electronics

Project Name: N/A

Applications: N/A

Contact Person: N/A

Customer Part Number: N/A

1. Scope:
   1.1 This specification applies to the 24.576MHz crystal oscillator used in electronic equipment.

2. Construction:
   2.1 Type of Holder: 165 SERIES (RoHS Compliant)
   2.2 Enclosure Seal: Resistance weld

3. Characteristics:

3.1	Nominal Frequency	24.576MHz
3.2	Frequency Stability	±50 ppm (inclusive of Freq. Tol. @ 25°C, Load Variance, Supply change, TC, and 1st year Aging)
3.3	Operating Temperature Range	-40°C to 85°C
3.4	Storage Temperature Range	-55°C to 125°C
3.5	Input Voltage (V_{DD})	3.3V±10%
	Current (I_{DD})	10mA Max.
3.6	Output State Control	Enable/Disable
3.7	Output Symmetry	45% to 55% @ $0.5V_{DD}$
3.8	Rise Time	5ns Max.
3.9	Fall Time	5ns Max.
3.10	Output Voltage V_{OL}	$0.1V_{DD}$ Max.
	V_{OH}	$0.9V_{DD}$ Min.
3.11	Start-up Time	3 ms max.
3.12	Output Waveform	CMOS
3.13	Output Load	15pF
3.14	Supply Current (Disable)	10uA Max.

				TITLE CRYSTAL OSCILLATOR		DWG.	JC Xie
						DATE	2021-02-25
				PART NO 1651-24575-BTBQYA	TOLERANCE	CHKD.	LH Wang
				MODEL 165 SERIES	X.± X.X±	DATE	22021-02-25
				REMARK	X.XX.± ANGULAR±	APPD.	CS Chiang
						DATE	2021-02-25
	DATE	MODIFY DESCRIPTION	BY	SALESMAN: Miu Chim	SHEET 1/2	REV	0

EXTERNAL DIMENSIONS

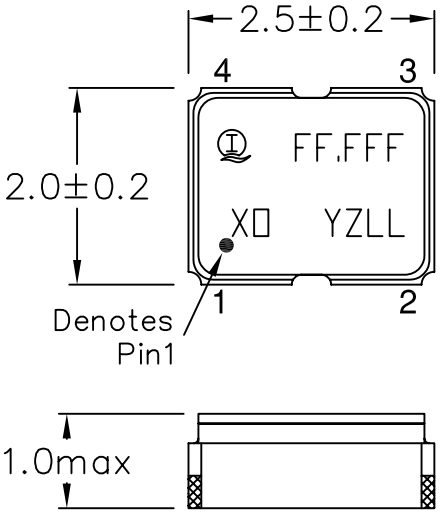

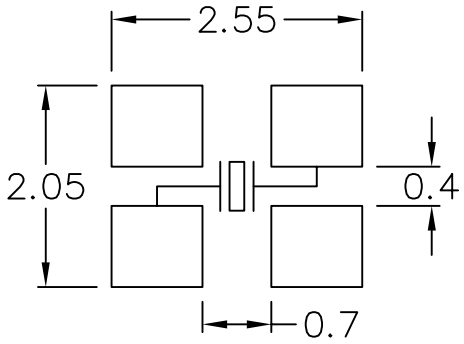

RECOMMENDED SOLDERING PATTERN

PIN CONNECTION

P/N	1651
1	Enable/Disable*
2	GND
3	Output
4	VDD

* Enable/Disable functional description

When pin1 goes high (>=0.7VDD) or open ,the Oscillator in normal operation and has output in frequency. When pin1 goes low (<=0.3VDD) ,the oscillator stops and the oscillator output (Pin3) becomes high impedance.

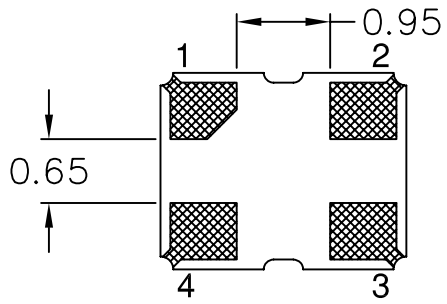

CMOS TEST CIRCUIT

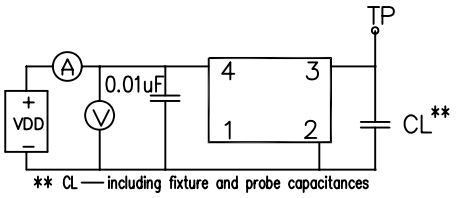

TYPICAL CMOS WAVE FORM

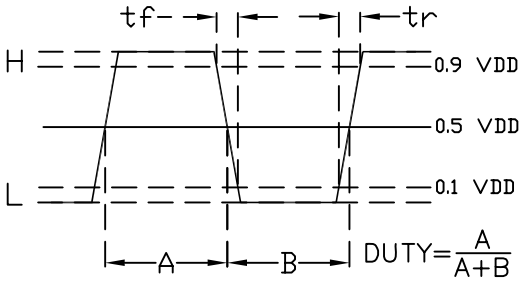

MARKING SPECIFICATIONS

INTERQUIP company's logo

FF.F — Represent frequency (MHz) after decimal point keep 3 digit.

XO — Represent crystal control oscillator

YZ — REPRESENT MONTH & YEAR CODE RESPECTIVELY

" Y " :

MONTH	Jan	Feb	Mar	Apr.	May	Jun	Jul	Aug	Sep	Oct	Nov	Dec
MARK	A	B	C	D	E	F	G	H	J	K	L	M

" Z " CODE IS THE LAST NUMBER OF PRODUCTION YEAR

FOR INSTANCE:

YEAR	2009	2010	2011	2012	2013
MARK	9	0	1	2	3

LL — Represent lot code (AA-ZZ)

NOTES: 1. ALL DIMENSIONS ARE IN MM

2. DO NOT SCALE DRAWING

Interquip Electronics Co., Ltd

TITLE CRYSTAL CLOCK OSCILLATOR

PART NO.

MODEL 1651 SERIES

REMARK

TOLERANCE
X.±0.3 X.X±0.15
X.XX±0.05 ANGULAR±

DWN.	M.Zhao
DATE	2011.12.12
CHKD	XM Sun
DATE	2011.12.12
APPD.	Johnson_Mok
DATE	2011.12.12

DATE	MODIFY DESCRIPTION	BY

DWG.NO. 004-0631A-001 REV. 1